國立高雄大學九十七學年度研究所碩士班招生考試試題

系所：
應用物理學系碩士班磁性與半導體組
應用物理學系碩士班奈米組
應用物理學系碩士班光電組

科目：工程數學
考試時間：100 分鐘
是否使用計算機：是
本科原始成績：100 分

1. Let $\vec{A}$ be constant vector and $\vec{R} = x\hat{i} + y\hat{j} + z\hat{k}$.

   Calculate (a) $\vec{\nabla}(\vec{R}\cdot\vec{A})$ (b) $\vec{\nabla}\cdot(\vec{R}-\vec{A})$ (c) $\vec{\nabla}\times(\vec{R}-\vec{A})$. (15%)

2. Find a solution of $y''+2y'-3y = 4e^{x}$. (15%)

3. Use the ***Matrix Methods*** to solve the system as below.

$$\begin{cases} x_1 - 3x_2 + x_3 - 7x_4 + 4x_5 = 0 \\ x_1 + 2x_2 - 3x_3 = 0 \\ x_2 - 4x_3 + x_5 = 0 \end{cases}. \quad (15\%)$$

4. Find the ***Fourier transform*** of the function.

   Let $f(x) = 2x+1$, for $-3 \le x \le 3$. (15%)

5. Evaluate $\oint_C \frac{e^{z}\cos(z^2)dz}{(z-i)(z+4)^2}$. (15%)

6. Use ***Laplace transform*** to solve the given system, subject to the given conditions.

$$\begin{cases} x''-2x'+3y'+2y = 4 \\ 2y'-x'+3y = 0 \end{cases}, \quad x(0) = x'(0) = y(0) = 0. \quad (15\%)$$

7. Consider the problem of finding the charge $Q(t)$ in the RLC circuit of Figure 1 if the electromotive force is k until time $t=2$ and then has constant value zero. Analytically, $E(t) = k[1-u(t-2)]$ as shown in Figure 2. Use ***Laplace transform*** to solve it. (10%)

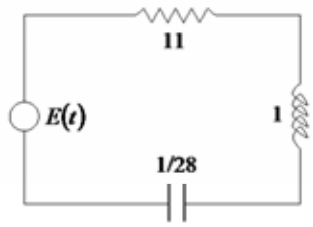

Figure 1

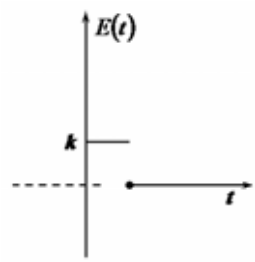

Figure 2

國立高雄大學九十七學年度研究所碩士班招生考試試題

科目：電子學
考試時間：100 分鐘

系所：
應用物理學系碩士班光電組　　是否使用計算機：是
本科原始成績：100 分

1. For the circuit in Fig. 1, let R_E=2KΩ, R_1=500KΩ, R_2=70KΩ, R_3=500KΩ and β=60. (a)Find R_{TH} and V_{TH} for the base circuit. (10%) (b) Determine I_{BQ}, I_{CQ}, V_E, and the maximum value of R_C such that transistor is in forward-active mode. (10%)
2. Write down the characteristic equation and the excitation table for the RS flip-flop, D flip-flop, T flip-flop and JK flip-flop. (20%)
3. Design a circuit of vote machine for three persons. ? ? represents opposition, ? ? represents agreement. (10%) How many 3-input and 4-input NAND gates are respectively enclosed in one TTL SSI such package if it contains the function of circuit. (10%)
4. Describe an intrinsic semiconductor material and calculate the intrinsic carrier concentration in germanium at T=400 ^{o}K. (20%)
5. Describe an extrinsic semiconductor material and calculate the thermal equilibrium electron and hole concentrations for considering germanium at T=400 ^{o}K doped with antimony at a concentration of 10^{16} cm^{-3}. (10%) What is the type for the semiconductor material? (10%)

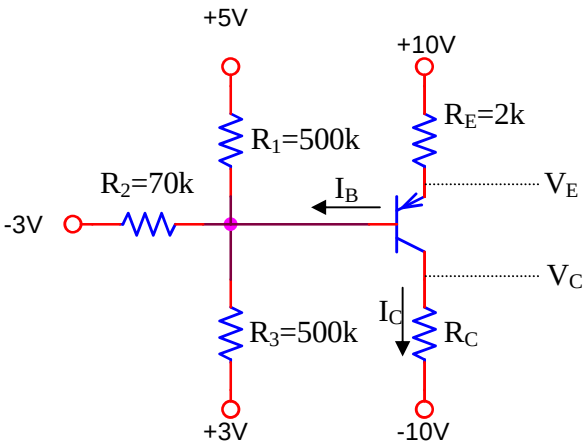

Fig.1

一. (16 Points) A metal sphere of radius R, carrying charge q, is surrounded by a thick concentric metal shell (inner radius a, outer radius b, as in Fig. 1). The shell carries no net charge.

(a). Find the surface charge density σ at R, at a, and at b.

(b). Find the potential at the center, using infinity as the reference point.

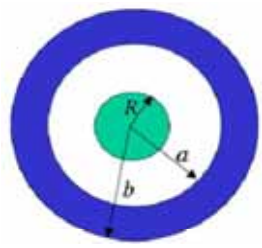

Fig. 1

二. (16 Points) A short solenoid (length ℓ, radius **a**, n_1 turns per unit length) and a very long one (**b**, n_2) are coaxial, as shown in Fig. 2. Current I flows in the short one. What is the magnetic flux Φ_m through the long one?

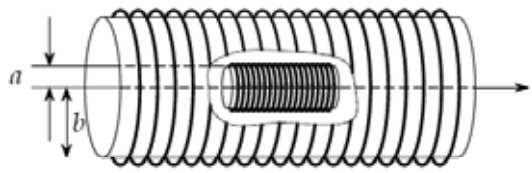

Fig. 2

三. (18 Points) Please write down the differential forms of charge、energy and momentum conservations in electromagnetic fields.

四. (16 Points) Please write down the differential form of Maxwell's equations in terms of free charges and currents.

五. (20 Points)

(a). Find both the magnetic field $\vec{B}$ and magnetic vector potential $\vec{A}$ of an infinite uniform surface current $\vec{K}=K\hat{x}$, flowing over the xy plane.

(b). Using the results obtained above, verify the magneto-static boundary conditions for the field $\vec{B}$ and potential $\vec{A}$.

六. (14 Points)

(a). What are the two differential equations satisfying the Maxwell's equations for the scalar and vector potentials in electrodynamics?

(b). What are the Coulomb Gauge and Lorentz Gauge?

國立高雄大學九十七學年度研究所碩士班招生考試試題

系所：

科目：普通物理　　應用物理學系碩士班磁性與半導體組　　是否使用計算機：是

考試時間：100 分鐘　　應用物理學系碩士班奈米組

本科原始成績：100 分

1. (15%) A solid, uniform disk of mass M and radius R is oscillating about an axis through P. The axis is perpendicular to the plane of the disk. Suppose the friction at P can be ignored. The distance from P to the center, C, of the disk is b (see figure 1). The gravitational acceleration is g.
   (a). When the displacement angle is θ, what then is the torque relative to point P?
   (b). What is the moment of inertia for rotation about the axis through P?
   (c). The torque causes an angular acceleration about the axis through P. Write down the equation of motion in terms of the angle θ and the angular acceleration.

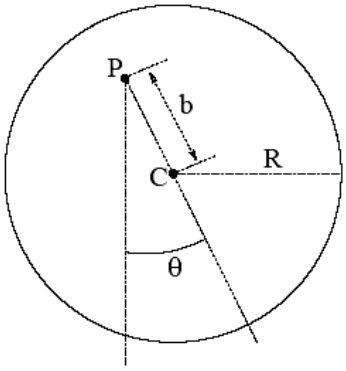

Figure 1

2. (20%) Describe the classical *Hall effect* experiment. What important information does the *Hall effect* provide if the strip is made of a semiconductor?

3. (20%) A long straight solid cylindrical conducting wire with radius R carries a steady uniform current I.
   (a). Calculate the magnetic field energy inside a length l of the wire.
   (b). What is the contribution of the interior portion of the conductor to the total self-inductance?

4. (25%) Describe the *Photoelectric effect* experiment. Please interpret its physical meaning and significance.

5. (20%) Briefly give the definition of following terms, please deliver relation formulas if need:
   (a). Work-Energy principle.
   (b). Zero, first and second laws of thermodynamics.
   (c). Huygen principle.
   (d). Dielectrics, Ferromagnets, Semiconductors and Superconductors.