國立高雄大學九十七學年度研究所碩士班招生考試試題

科目：　　系所：
化工熱力學與化學反應工程　化學工程及材料工程學系碩士班甲組　是否使用計算機：是
考試時間：100 分鐘　　本科原始成績：100 分

1. An engineer claims to have invented a steady-flow device that will take air at 4 bar and 20℃ and separate it into two streams of equal mass, one at 1 bar and -20℃ and the second at 1 bar and 60℃. Furthermore, the inventor states that his device operates adiabatically and does not require (or produce) work. Is such a device possible? (Air can be assumed to be an ideal gas with a constant heat capacity of C_p = 29.3 J/mol K.) (12%)

2. The enthalpy of a binary liquid system of species 1 and 2 at fixed temperature and pressure is represented by the equation:

$$H = 400x_1 + 600x_2 + x_1x_2(40x_1+20x_2)$$

where H is in J mol^{-1}. Determine expressions for $\overline{H_1}$ and $\overline{H_2}$ as functions of x_1, numerical values for the pure species enthalpies H_1 and H_2, and numerical values for the partial enthalpies at infinite dilution $\overline{H}_1^{\infty}$ and $\overline{H}_2^{\infty}$. (24%)

3. A n ideal gas undergoes the following sequence of mechanically reversible process in a closed system:

(a) From an initial state of 70℃ and 1 bar, it is compressed adiabatically to 150℃.
(b) It is then cooled from 150℃ to 70℃ at constant pressure.
(c) Finally, it is expanded isothermally to its original state.

Calculate W, Q, ΔU, and ΔH for each of the three processes and for the entire cycle. Take C_v = (3/2)R and C_p = (5/2)R. （R=8.314 J mol^{-1} K^{-1}） (16%)

4. Substance A reacts according to second order kinetics and conversion is 95% from a single flow reactor. We buy a second unit identical to the first. For the same conversion, by how much is the capacity increased if we operate these two units in parallel or in series?
   (a) The reactors are both plug flow. (12%)
   (b) The reactors are both CSTR. (12%)

5. The isomerization of butane

$$n\text{-}C_4H_{10} \Leftrightarrow i\text{?}C_4H_{10}$$

was carried out adiabatically in the liquid phase and the data in the table were obtained.

科目：化工熱力學與化學反應工程　　系所：化學工程及材料工程學系碩士班甲組　　是否使用計算機：是
考試時間：100 分鐘　　本科原始成績：100 分

Raw data

X	0.0	0.2	0.4	0.6	0.65
$-r_A$ (kmol/m^3.h)	39	53	59	38	25

Furthermore, the reactor scheme shown in the figure is used.

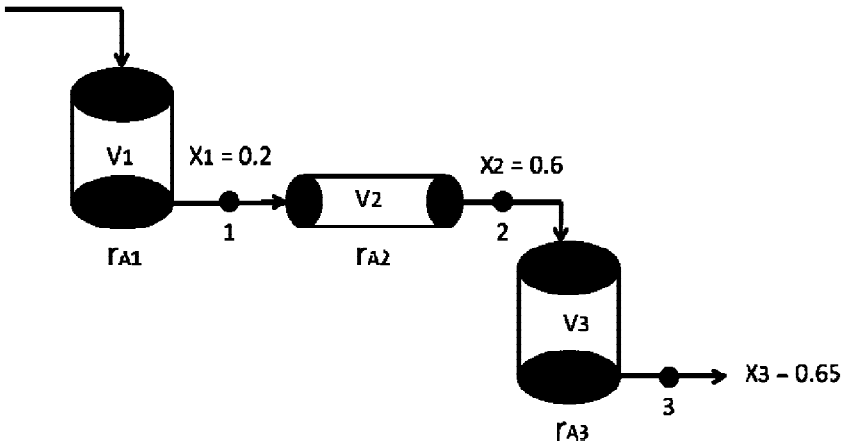

Calculate the volume of each of the reactors for an entering molar flow rate of n-butane of 50 kmol/hr.　(24%)

國立高雄大學九十七學年度研究所碩士班招生考試試題

科目：材料科學導論
考試時間：100 分鐘

系所：
化學工程及材料工程學系碩士班乙組　　是否使用計算機：是
本科原始成績：100 分

1. Consider a single crystal of BCC iron oriented such that a tensile stress is applied along a [010] direction. ($\tan^{-1}(\sqrt{2}) = 54.7^{o}$, $\cos 54.7^{o} = 0.577$, $\cos 30^{o} = 0.866$, $\cos 45^{o} = 0.707$, $\cos 60^{o} = 0.5$)

   a. Compute the resolved shear stress along a (110) plane and in a $[\bar{1}11]$ direction when a tensile stress of 52 MPa is appled. (5 points)

   b. If slip occurs on a (110) plane and in a $[\bar{1}11]$ direct, and the critical resolved shear stress is 30 MPa, calculate the magnitude of the applied tensile stress necessary to initiate yielding. (5 points)

2. What are the planes of highest density in FCC? What are the directions of highest density within these planes? How many slip systems does a FCC crystal have? Draw schematically to show these slip systems. (15 points)

3. Describe the three stages of annealing in a plastically deformed metal, including the driving force and the microstructure change of each stage. (18 points)

4. Briefly explain why some transparent materials appear colored while others are colorless. (10 points

5. Why does chromium in stainless steels make them more corrosion resistant in many environments than plain carbon steel? (10 points)

6. Please write down five types of magnetisms. (10 points)

7. Figure 1 is the tin-gold phase diagram, for which only signle-phase regions are labeled. Specify temperature-composition points at which all eutectics, eutectoids, peritectics, and congruent phase transformations occur. Also, for each, write the reaction upon cooling. (15 points)

科目：材料科學導論
考試時間：100 分鐘

系所：
化學工程及材料工程學系碩士班乙組　　是否使用計算機：是
本科原始成績：100 分

8. Using the isothermal transformation diagram for a 1.13 wt% C steel alloy (Fig. 2), determine the final microstructure (in terms of just the microconstituents present) of a small specimen that has been subjected to the following time-temperature treatments. In each case assume that the specimen begins at 920℃ and that it has been held at this temperature long enough to have achieved a complete and homogeneous austenitic structure. (12 points)
   a. Rapidly cool to 775℃, hold for 500 sec, then quench to room temperature. (4 points)
   b. Rapidly cool to 700℃, hold at this temperature for 10^5 sec, then quench to room temperature. (4 points)
   c. Rapidly cool to 600℃, hold at this temperature for 7 sec, rapidly cool to 450℃, hold for 4 sec, then quench to room temperature. (4 points)

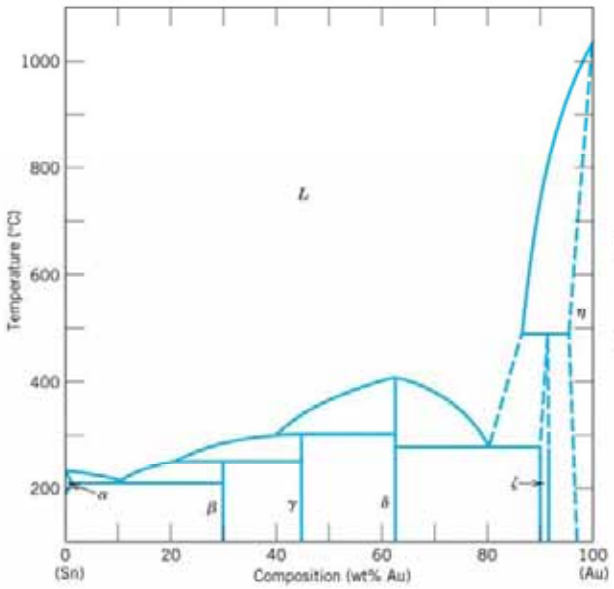

Figure 1

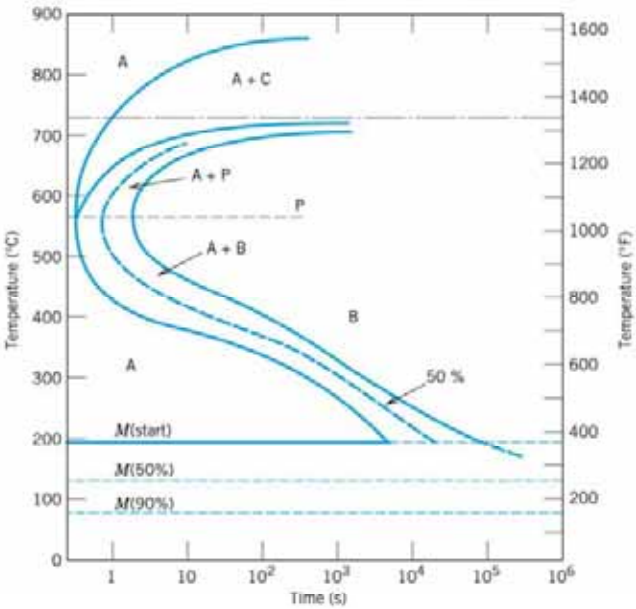

Figure2

國立高雄大學九十七學年度研究所碩士班招生考試試題

科目：材料熱力學
考試時間：100 分鐘

系所：
化學工程及材料工程學系碩士班乙組　　是否使用計算機：是
本科原始成績：100 分

(備註：log( )或 e( )內不用算出，只需化為最簡數字)

1. One hundred moles of hydrogen gas at 298K are reversibly and isothermally compressed from 20 to 10 liters. The van der Waals constants for hydrogen are a = 0.2461 liters^2 戢m mole^{-2} and b = 0.02668 1/mole, and in the range of pressure 1~1500 atm, the virial equation for hydrogen is $PV = RT\,(1+ 6.4 ? 10^{-4} P)$. Calculate the work that must be done on the system to effect the required change in volume and compare this with the values that would be calculated assuming that (a) hydrogen behaves as a van der Waal gas and (b) hydrogen behaves as an ideal gas.　(18%)

2. The activity coefficient of Zn in liquid Zn-Cd alloys at 435℃ can be represented as

$$\ln \gamma_{Zn} = 0.875\, X^2_{Cd} - 0.30\, X^3_{Cd}$$

Derive the corresponding expression for the depedence of $\ln \gamma_{Cd}$ on composition and calculate the activity of cadmium in the alloy of X_{Cd} = 0.6 at 435℃. (12%)

3. Gold and silicon are mutually insoluble in the solid state and form a eutectic system with a eutectic temperature of 636 K and a eutectic composition of X_{Si} = 0.186. Calculate the Gibbs free energy of the eutectic melt relative to (1) unmixed liquid Au and liquid Si, and (2) unmixed solid Au and solid Si.　($Au_{(S)} \rightarrow Au_{(l)}$, ΔH_{trans} = 12,600 J,　T_{trans} = 1338 K;
$Si_{(S)} \rightarrow Si_{(l)}$, ΔH_{trans} = 50,200 J, T_{trans} = 1658 K) (12%)

4. By establishing the equilibrium

$$PCl_{5(g)} = PCl_{3(g)} + Cl_{2(g)}$$

at 500 K in a mixture of PCl_5 and PCl_3 a gas is obtained at 1 atm total pressure in which the partial pressure of Cl_2 is 0.1 atm. In what ratio were PCl_5 and PCl_3 mixed to obtain this equilibrium gas? ($PCl_{3(g)} + Cl_{2(g)} = PCl_{5(g)}$, $\Delta G^\circ = -95{,}600 - 7.94\, T \ln T + 235.2\, T$ J) (10%)

5. Determine the maximum pressure of water vapor in wet hydrogen at 1 atm pressure in which chromium can be heated without oxidation occurring at 1600 K. Is the oxidation of Cr by water vapor exothermic or endothermic?

$$2Cr_{(S)} + 3/2\, O_{2\,(g)} = Cr_2O_{3\,(S)},\quad \Delta G^\circ = -1{,}110{,}100 + 247.3\, T \text{ J}$$

$$H_{2\,(g)} + 1/2\, O_{2\,(g)} = H_2O_{(g)},\quad \Delta G^\circ = -247{,}500 + 55.85\, T \text{ J}$$

(12%)

6. A CH_4-H_2 gas mixture at 1 atm total pressure, in which p_{H2} = 0.957 atm, is equilibrated with an Fe-C alloy at 1000 K. Calculate the activity of C with respect to graphite in the alloy. What would the value of p_{H2} in the gas mixture (at P_{total} = 1 atm) have to be in order to saturate the Fe with graphite at 900 K? ($C_{(gr)} + 2H_{2(g)} = CH_{4(g)}$, $\Delta G^\circ = -91{,}040 + 110.7\,T$ J) (12%)

7. Below the triple point (−56.2℃) the vapor pressure of solid CO_2 is given as

$$\ln p\,(\text{atm}) = -\frac{3116}{T} + 16.01$$

The molor latent heat of melting of CO_2 is 8330 joules. Calculate the vapor pressure exerted by liquid CO_2 at 25℃ and explain why solid CO_2 is referred to as “dry ice.” (12%)

8. A galvanic cell is set up with electrodes of solid aluminum and solid aluminum-zinc alloy and an electrolyte of molten $AlCl_3$-NaCl. When the mole fraction of Al in the alloy electrode is 0.38, the EMF of the cell is 7.43 milli-volts at 380℃, and the temperature coefficient of the EMF is 2.9? 0^{-5} volts/degree. Calculate (1) the activity of Al in the alloy, and (2) the partial molar Gibbs free energy of mixing of Al in the alloy. (12%)

國立高雄大學九十七學年度研究所碩士班招生考試試題

科目：輸送現象與單元操作
考試時間：100 分鐘

系所：
化學工程及材料工程學系碩士班甲組　是否使用計算機：是
本科原始成績：100 分

1. A Newtonian fluid flows through a rectangular slit, find the velocity distribution and the average velocity. (Assume W, L>>B, you can neglect edge effect) (佔分 10%)

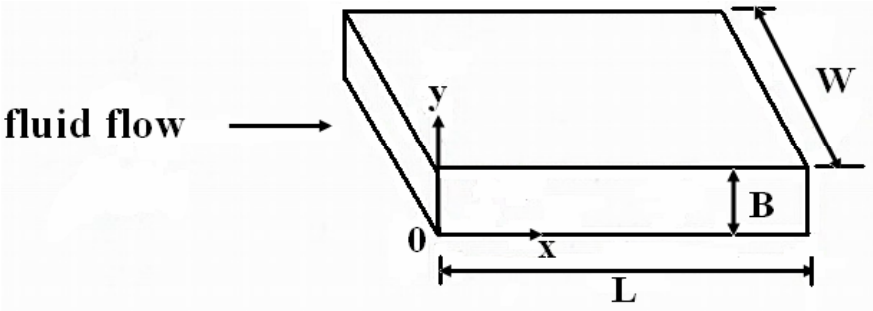

2. A cooling fin was attached on the hot wall as shown in the following figure. The fin is thin enough, therefore temperature variations in the thickness direction are negligible. And, the convective heat losses to the surrounding air from the edges of the fin can be negligible. Wall temperature is T_w, the surrounding temperature T_o, and the heat transfer coefficient h. Find (i) the steady-state temperature distribution along the fin and (ii) the heat loss to the surrounding from the fin, and (iii) fin efficiency. (佔分 30%)

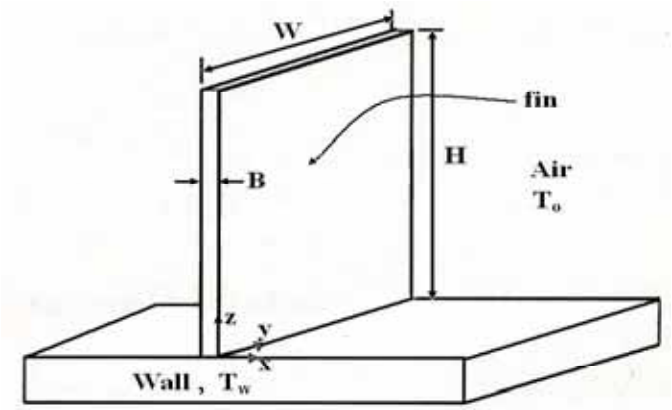

3. A solute spherical particle is suspended and sparely dissolved in a solvent. At initial, the particle has a radius of R_1 and the concentration on particle surface is at saturation C_{A1}. Assume the sphere is relatively small with respect to the fluid volume. Find (i) the concentration profile, (ii) the dissolution flux of the solute sphere, and (iii) If the sphere is enlarged to three times, what is the dissolution flux? (佔分 30%)

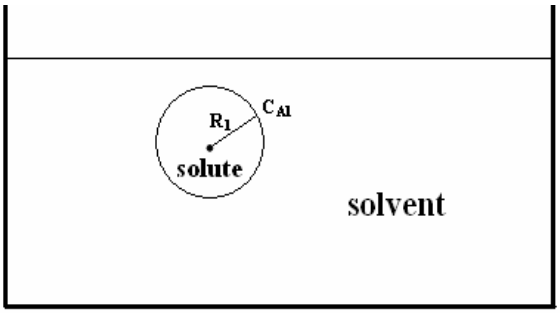

4. A continuous fractionating column is designed to separate 30000kg/h of a mixture of 50 wt% benzene and 50 wt% toluene into an overhead product containing 90 wt% benzene and a bottom product containing 90 wt% toluene. A reflux ratio of 3.0 mole to 1 mole of product is used. The molal latent heats of benzene and toluene are 7360 and 7960 cal/gmole, respectively. Benzene and toluene form a nearly ideal system with a relative volatility of about 2.5; the equilibrium curves are shown in the plots. The feed has a boiling point of 95°C at 1 atm.
   (a) Calculate the moles of overhead product and bottom product per hour.
   (b) Determine the number of ideal plates and the position of the feed plate for the cases: (i) if the feed is liquid and at its boiling point; (ii) if the feed is a mixture of two-thirds vapor and one-third liquid. (佔分 30%)

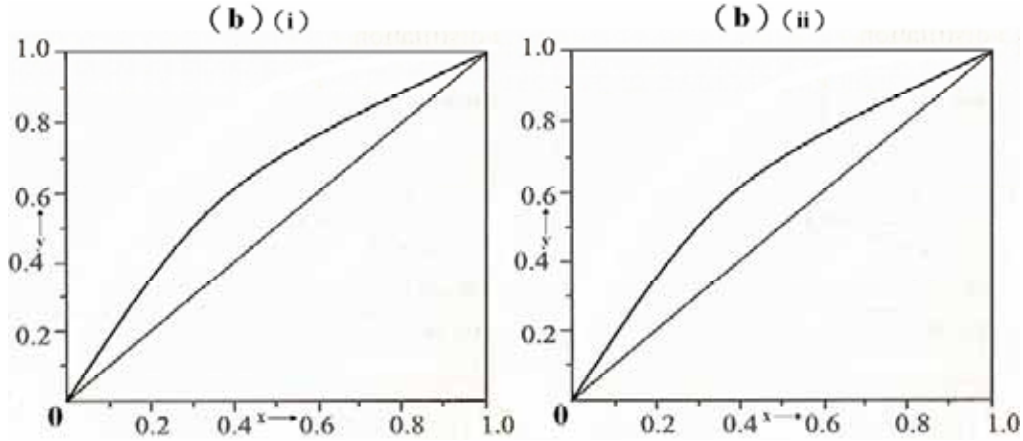

科目：輸送現象與單元操作
考試時間：100 分鐘

系所：
化學工程及材料工程學系碩士班甲組　是否使用計算機：是
本科原始成績：100 分

第 4 題(b)部分作圖請畫於此，連同答案卷交齊。